Jet Cleaning Control System

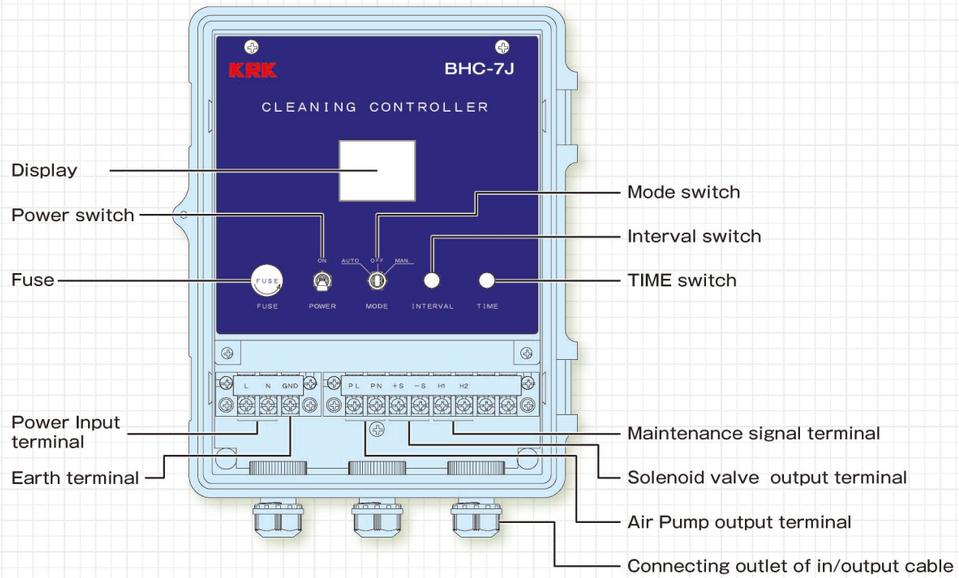

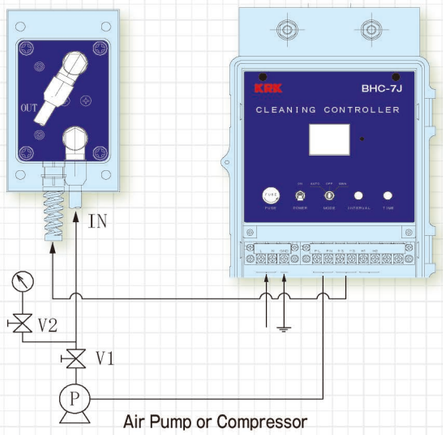

Cleaning Unit time sequence
The relation between operation and time of Cleaning Unit is shown as mentioned below.

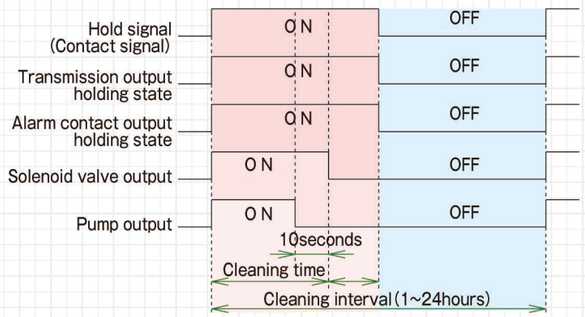

※Solenoid valve and pump output voltage : follows a power supply

Product Name	Jet cleaning controller
MODEL	BHC-7J
Cleaning cycle	1 – 24 hours (1 hour unit is possible to set)
Cleaning time	1 – 5 minutes (1 minute unit is possible to set)
Hold time	Cleaning Time + 3 minutes
Contact point signal	ON during cleaning. ※After start of cleaning, no-voltage contact point signal is output from the controller.
Power source	AC 85 ~ 240V 50/60 Hz

KRK
KASAHARA CHEMICAL INSTRUMENTS CORP.
TEL 0480-38-9151 FAX 0480-38-9157
email:krk@krkjpn.co.jp
URL:https://www.krkjpn.co.jp
2-133-8 Sakurada, Kuki-City, Saitama,Japan 〒340-0203

※Specifications listed in the catalog are subject to change without notice for performance improvement.

Printed in Japan 22.H

KRK

LASER TURBIDITY MONITOR

WITH JET CLEANING SYSTEM

Usage

Water purification plant

Drinking Water

Swimming pool

Laser Turbidity Monitor With Jet Cleaning System

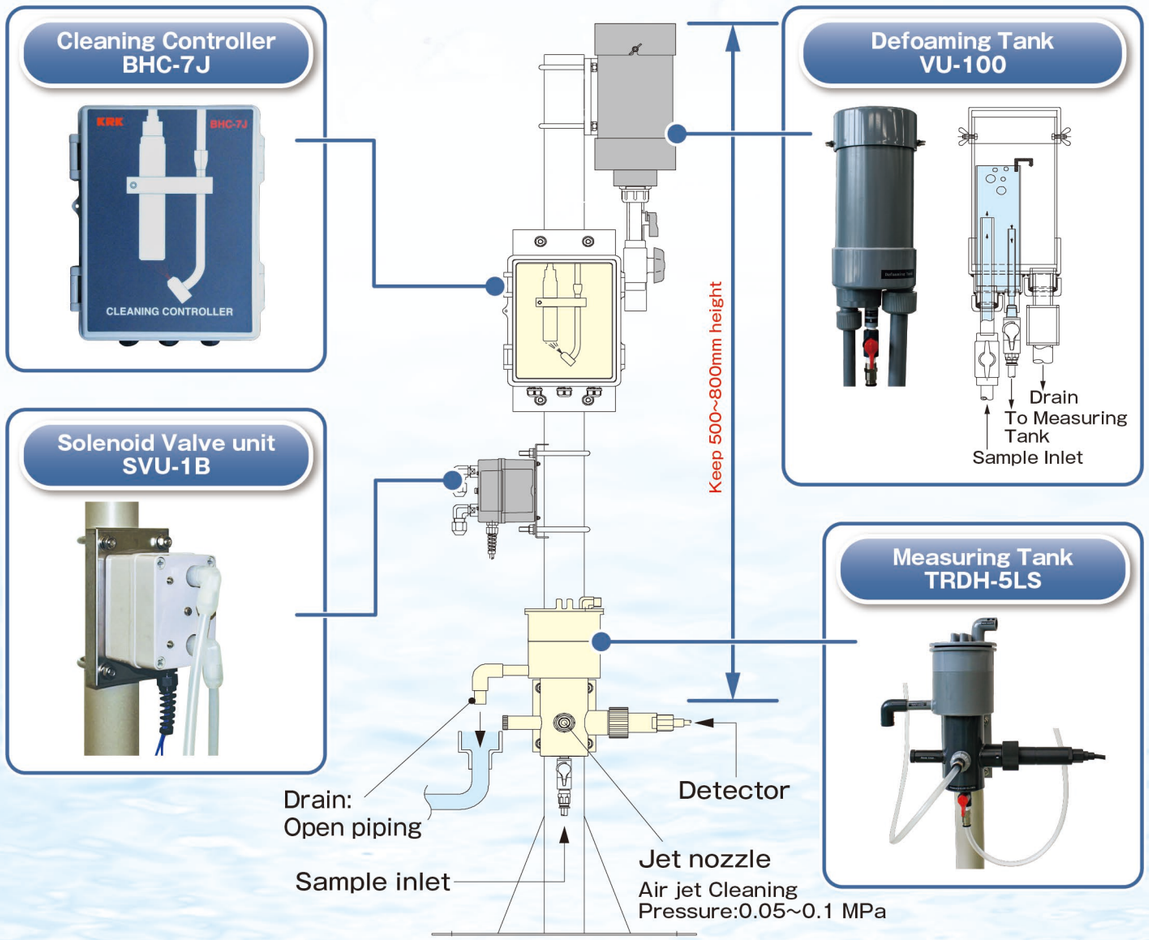

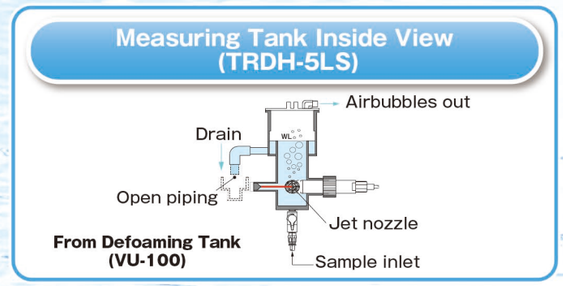

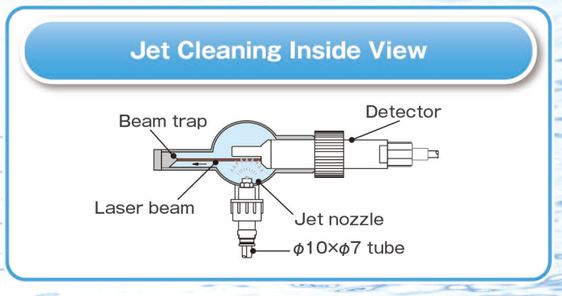

Laser Turbidity Monitor With Jet Cleaning System

■ Outline

When 660nm red pulse laser bundle is projected into the sample water, strong scattered light occurs. This scattered light is detected by the light receiving element angled at 90°, transferred to the converter as density signal, calculated, amplified and digitally displayed. Laser turbidity monitor sensitively measures molecule turbidity hardly influenced by colority.

■ Measuring System Drawing

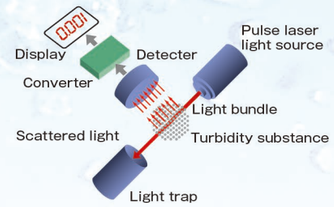

■ Specification

Monitor

Model	TR-502L
Measuring Method	Laser scattered light measurement system (nephelometry method)Standard of JIS K0801, K0101
Measuring Wave	660nm
Display	LED 4-digit digital display
Measuring Range	Select ① or ② ① 0.00~20.00 NTU STD. (Minimum Resolution : 0.00 NTU) ② 0.000~2.000NTU (Minimum Resolution : 0.000 NTU)
Resolution	① 0.00(NTU) ② 0.000(NTU)
Transmission Output	Select ① or ② DC 4~20 mA (Isolation type) 3 Steps Changeover Type ①0.00~5.00 / 0.00~10.00 / 0.00~20.00 NTU ②0.000~0.500 / 0.000~1.000 / 0.000~2.000 NTU
Reproducibility	Less than ±2% of full scale
Linearity	Less than ±2% of full scale
Alarm Contact	Upper limit a, b contact (no-voltage) Contact rating: AC100V Less than 1A
Hold output	Hold transmission output and contact output by inputting no-voltage contact signal from the outside
Power Supply	AC 85~240V 50/60Hz
Water Conditions	Temperature: 0~40℃ (No freezing) Inflow pressure: About 0.01MPa~0.02MPa(About 0.1kg/cm²~0.2kg/cm²) (Over flow type not pressure defoaming system) (At the entrance to Flow Measuring tank) Discharge flow rate: more than about 0.05ℓ/min
Ambient Conditions	Humidity: Less than 85%RH (No freezing) Gas : No corrosive gas existing
Outer Dimensions	Indication converter:96(W)×96(H)×163(D) Detector: ϕ34×215.5
Material	Indication converter: SPC Detector : Quartz, SUS316、SCS14
Weight	Indication converter: Approx. 1.3kg Detector: Approx. 1.5kg

■ Measuring System Drawing

Standard Components

① Indication converter : TR-502L ····· 1Unit
② Detector: TRD-5LK (with 5m Cable) ····· 1Unit
③ Holder ····· 1Unit
Select A or B
A:TRDH-5L (For pressure defoaming system without jet cleaning function) ····· 1Unit
B:TRDH-5LS (For overflow system with jet cleaning function) ····· 1Unit
④ Others : Calibration Container ····· 1Unit
⑤ Panel fitting tool, warranty and Instruction manual ····· 1Unit
⑥ Reducing valve ····· 1Unit

Option

① Standard Turbidity Solution ····· 1Unit
Formazin 10 NTU 500mL
② Pole Stand(50A)
③ Defoaming Tank
Select A or B
A:DEF-5L (For Multi-item) ※See another catalogue
Special Make Tank With levels switch
B:VU-100 (For Single item)
④ Solenoid Valve for Jet cleaning Unit : SVU-1B
⑤ Control panel : BHC-7J ····· 1Unit

The First Standard Calibration by formazine solution

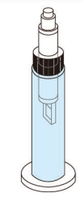
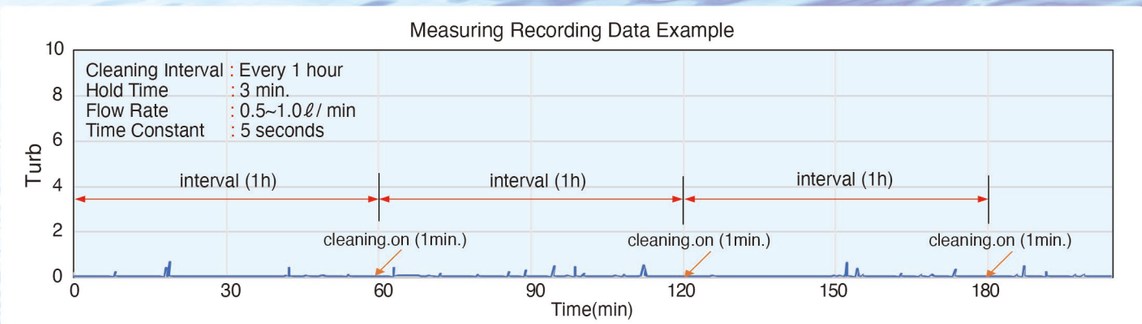
The Second Standard Calibration by simple calibrator